EVOQUE 48”

48” INDUCTION RANGE - ALL GLASS

CODE ID

F4EIR486BR1-**

- Easy Clean Ceramic Glass
- Bridge Zone
- Power Boost Burner
- Pan Detection system
- Residual Heat Sensor
- Dual True Convection (main oven)
- Single True Convection (accessory oven)
- Soft Closing Door
- Self Clean Oven
- 1 Telescopic Rack
- Cool Touch Door
- Digital Controls
- Meat Probe
- Fast Pre-Heat

F4EIR486BR1-WH
GLOSSY WHITE RAL 9016

F4EIR486BR1-IV
GLOSSY IVORY RAL 1013

F4EIR486BR1-BK
GLOSSY BLACK RAL 9004

F4EIR486BR1-SS
STAINLESS STEEL

F4EIR486BR1-MW
MATTE WHITE RAL 9016

F4EIR486BR1-MI
MATTE IVORY RAL 1013

F4EIR486BR1-MB
MATTE BLACK RAL 9004

F4EIR486BR1-RAL
RAL CODE

SUMMARY DESCRIPTION

The Evoque 48” induction range derives its name from a purposeful intention: to evoke memories of an era when ranges were designed to capture the essence and legacy of Italian artistry. This collection was conceived to provide customers with a unique appliance that beautifully unites the spirit of the Italian Renaissance with the performance North American consumers demand from a professional-style range. Every Evoque range is meticulously handcrafted in the Veneto Region of Italy with only the highest quality materials are selected, ensuring that each range reflects both the timeless traditions of Italian design and the rigorous standards expected in today’s kitchens. Finished with a refined Brushed Brass metal finish, the Evoque range is offered in a selection of standard colors or can be custom ordered in an RAL color to suit your personal style.

OPTIONAL ACCESSORIES

F6BG48STD	Standard trim
F6BG48HBT	High back trim
F6BG48BCI	Island trim
FMTRP30	Telescopic rack
FMTRP18	Telescopic rack

SPECIFICATIONS

COOKING SURFACE

Seven powerful premium European inductors
4 Single Induction cooking zones
1 Max Power with Ø 11” cooking zone
2 Bridge Zone Elements (griddle function)
Elegant Ceramic glass surface
Booster function for each cooking zone
Residual heat and Power-on Indicators
Pot Detection System
Child Lock Function
Automatic Heat-up

OVEN

Dual True Convection in main oven and
True Convection in accessory oven
Self-cleaning oven with Multifunction baking
Black Porcelain enamel interior
Cool to the touch soft closing doors
Extra-large baking cavity and viewing area
3 Halogen lights on main oven
2 Halogen light on accessory oven
2 Chrome racks per oven
1 Telescopic rack per oven
1 Meat probe
Total capacity 123 lt and 63,4 lt
Total capacity 4,34 cu. ft. and 2,24 cu. ft.

OVEN FUNCTIONS

Bake
Broil
Roast
True Convection
Warm / Proof / Dehydrate
Meat Probe
Self-Clean
Sabbath Mode
Convection Roast

EVOQUE 48”

48” INDUCTION RANGE - ALL GLASS

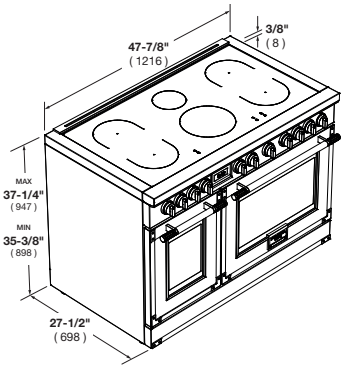

CODE ID		F4EIR486BR1-**	
Series		48” Evoque - Induction	
COOKTOP			
Type | Cooking Surface		Induction | Ceramic Glass	
Knobs		•	
Induction Special Features		BASIC 4	
		Pot Detection System	Child lock function
		Cooling fan system	Failure Codes indication
INDUCTION CONTROL FEATURES			
		Knob for power setting (illuminated)	Power levels 1 to 9
		Digital display for power level indication	Booster/Fast boil function for each zone
		Heat up time automatic	Minute minder
		Residual heat indication	
COOKING ZONES		6	
Front Left	Power L9 | Booster	Inductor Octa (210x190mm)	2100W | 3000W
Rear Left	Power L9 | Booster	Inductor Octa (210x190mm)	2100W | 3000W
Front Right	Power L9 | Booster	Inductor Octa (210x190mm)	2100W | 3000W
Rear Right	Power L9 | Booster	Inductor Octa (210x190mm)	2100W | 3000W
Front Middle	Power L9 | Booster	Inductor 10" (250mm)	2300W | 3000W
Rear Middle	Power L9 | Booster	Inductor 6 (145mm)	1400W | 1850W
OVEN			
Type		**ELECTRONIC NO PIRO**	**ELECTRONIC PIRO**
Oven Type		Multifunction 1 Fan (True Euro Conv.)	Multifunction 2 Fans (True Euro Conv.)
Temperature Regulation		Mechanical thermostat	Electronic
Functions			
Pyrolitic Self-Clean with automatic door latch			•
True European Convection Bake (Multi level)		•	•
Convection Broil		•	•
Convection Roast		•	•
Bake / Broil		•	•
Pizza (Lower Convection)		•	
Thaw (Defrost)			•
Oven Lights		•	•
Control Panel			
Control type		Thermostat	OKIDA OC3100 - Electronic
Clock, Temperature, Function Display		NO DISPLAY	White LED
Commands		2 Knobs	2 Knobs
Electric Oven Features			
Preheat bar (25%, 50%, 75%, 100%)			•
Sabbath mode			•
Hours clock format AM / PM			•
°F-°C degree unit			•
Oven Door(s)			
Oven Glass Window		Deep Embossed Window	Deep Embossed Window
Door Cooling System		4 Pane Heat Resistant Glass	4 Pane Heat Resistant Glass
Soft closing system		•	•
Door Hinges		Heavy Duty Steady Tilt	Heavy Duty Steady Tilt
Handle style		Alluminum Tube d30mm, Metal terminals	AlluminumTube d30mm, Metal terminals
Oven Cavity			
Net Capacity (cbft)		2,4	4.4
Cavity Enameling Colour		Black	Black
Rack Positions		6	6
Oven Lights		2 x20W Halogen	3x20W Halogen
Heating Element			
Broil Upper Heating Element		2100 W (240V)	3100 W (240V)
Upper Auxiliary Element Wattage		700 W (240V)	1032W (240V)
Concealed Bake Lower Heating Element		1750 W (240V)	1400 + 600 W (240V)
Convection Element Wattage		1x2500 W (240V)	2x1300 W (240V)
Oven Accessories			
Chromed racks		•	•
Enameled Grill set (basin + anti splash)			•
Telescopic chromed rack		•	•
Meat probe		not present	1
DIMENSIONS | WEIGHT (In or Lbs)			
Overall dim - Width | Height | Depth (Included Handle)		47 3/4” (1216 mm) | 35 3/8” (898) - 37 1/4” (947) | 29 3/4” (756 mm)	
Gross weight | Net weight		199 kg - 439 lb | 174 kg - 384 lb	
POWER / RATINGS (208/240 V, 60 HZ)			
KW/Amps rating at 120-240V, 60Hz		17,5 kW - 73 A	
KW/Amps rating at 120-208V, 60Hz		15,6 kW - 75 A	
Power Cable | Cable length		Nema 14-50P | 59 1/16” (1500mm)	
INSTRUCTIONS FOR USE			
Use & Care Manual - Installation Manual		EN, SP, FR	